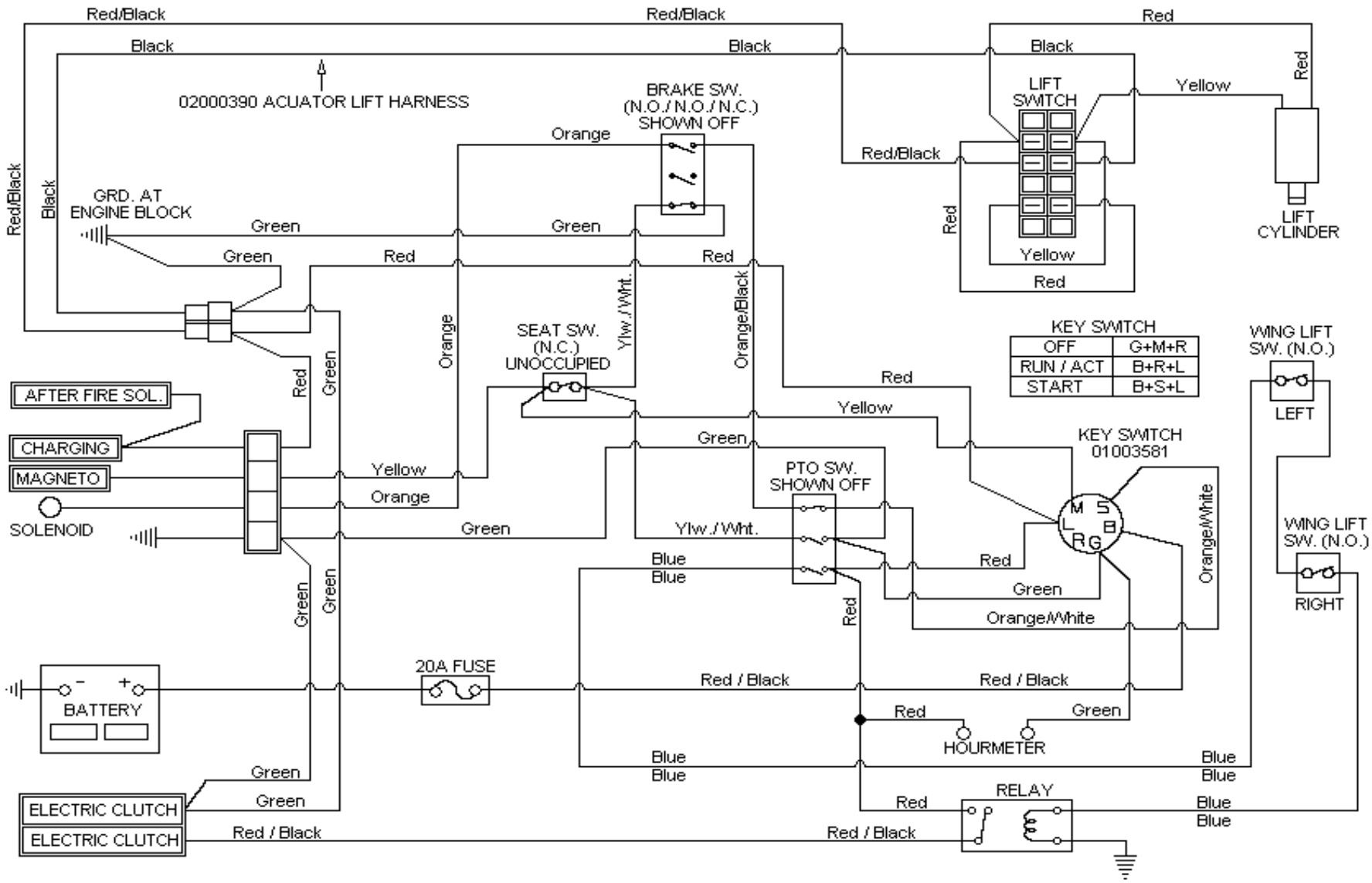MODEL Z-WING 48 (05-06)
HARNESS NUMBER (02000386)